Lid/Bottle Colour	Band Colour
clear bottle only	

100% of Actual Size
Pad Print

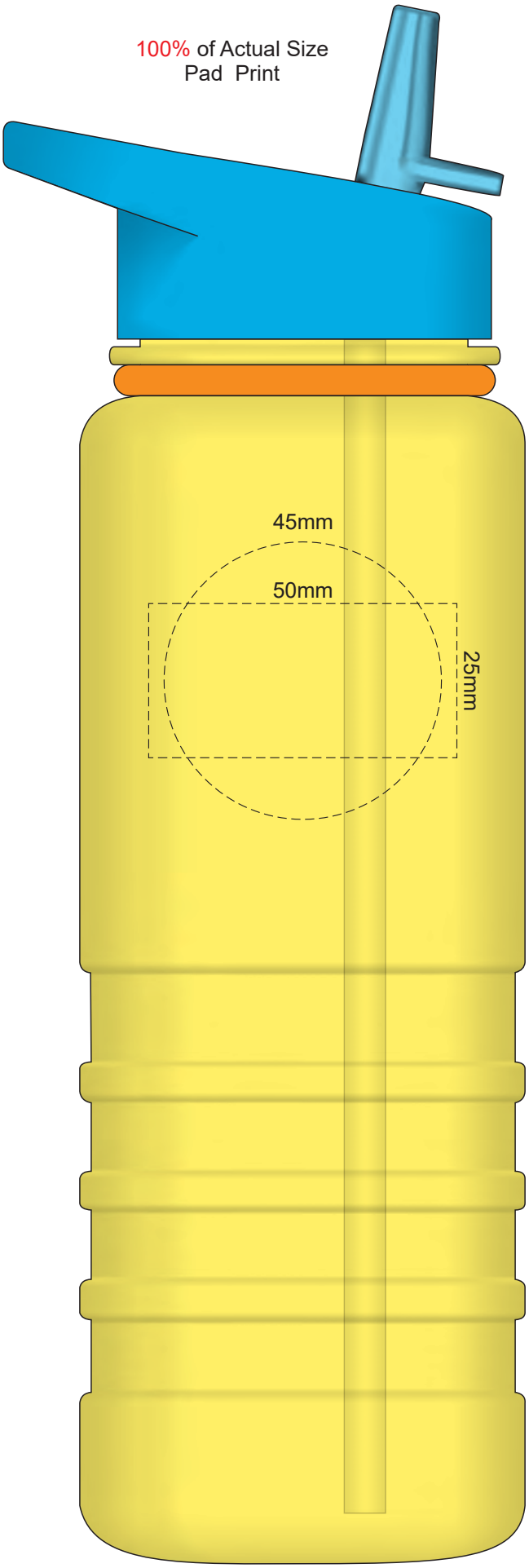

100% of Actual Size
Pad Print

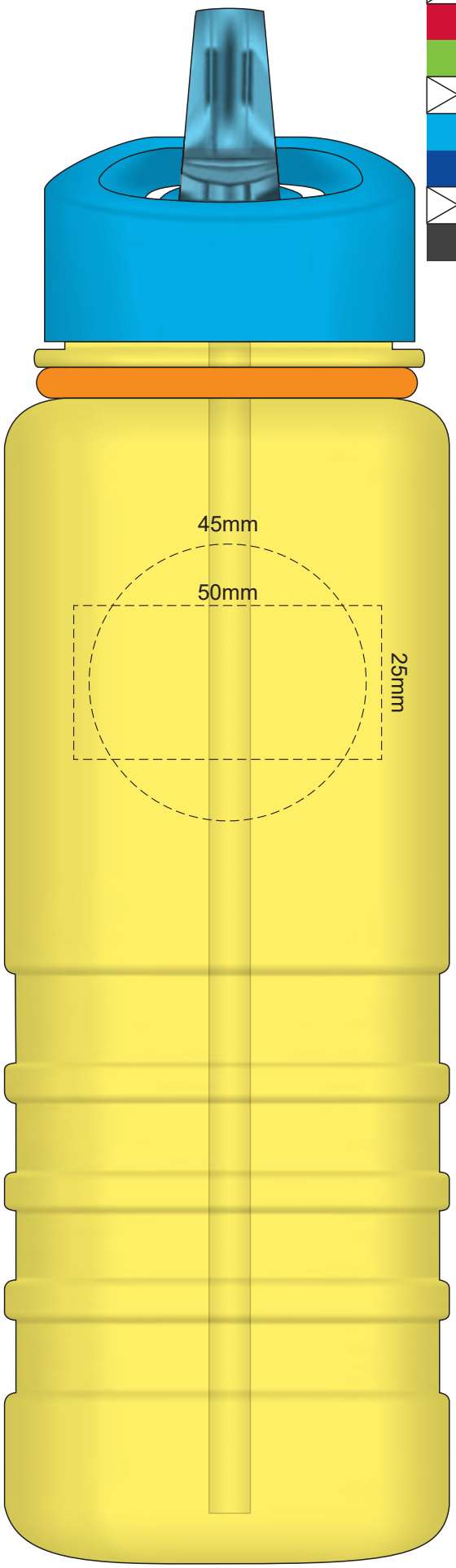

Lid/Bottle Colour	Band Colour
clear bottle only	

70% of Actual Size
Screen Print

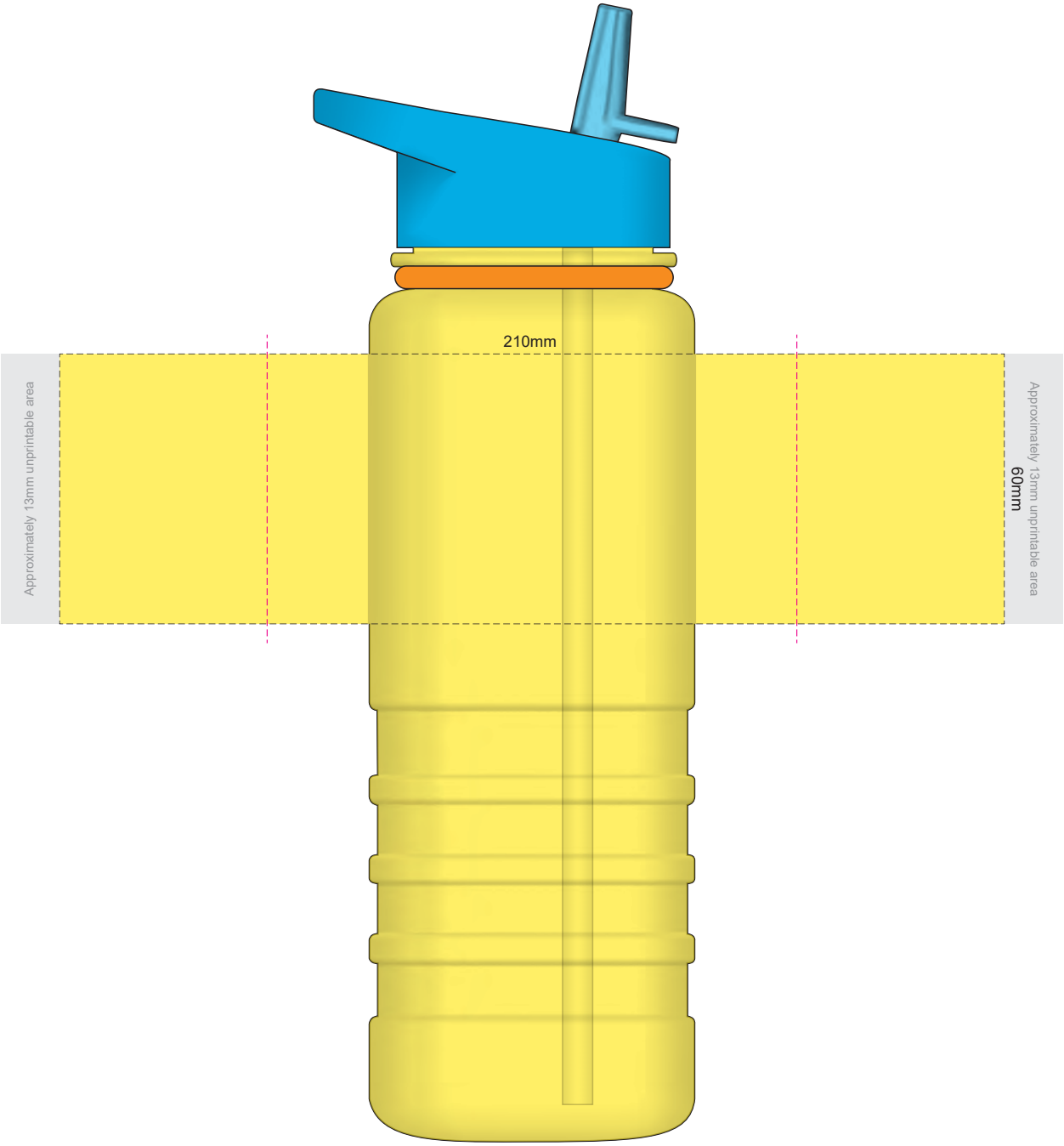

Red Line = Exact opposites of the product
(centre artwork to the red line)

Lid/Bottle Colour	Band Colour
clear bottle only	

70% of Actual Size
Rotary Digital
(Gloss Finish)

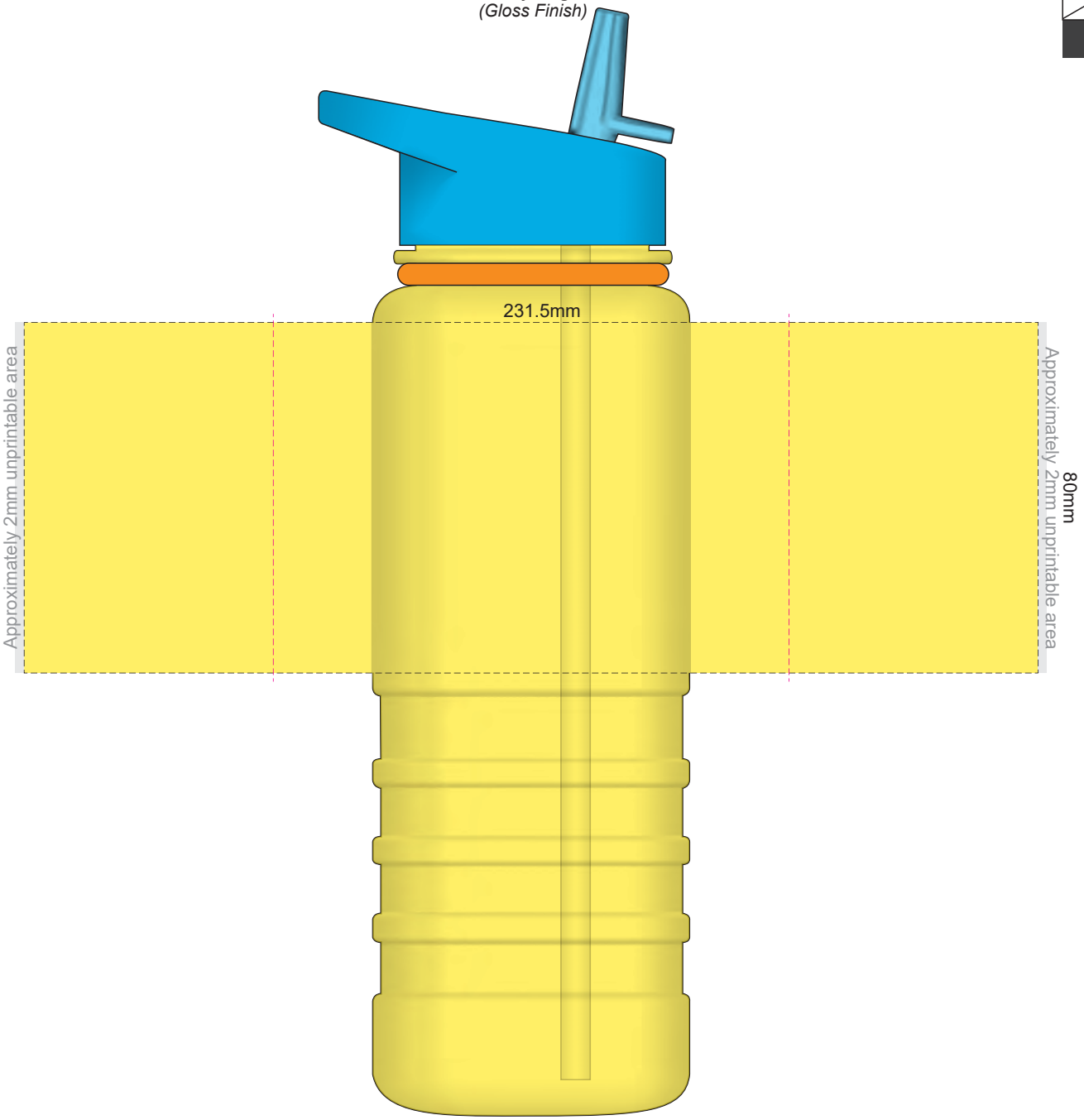

Red Line = Exact opposites of the product
(centre artwork to the red line)